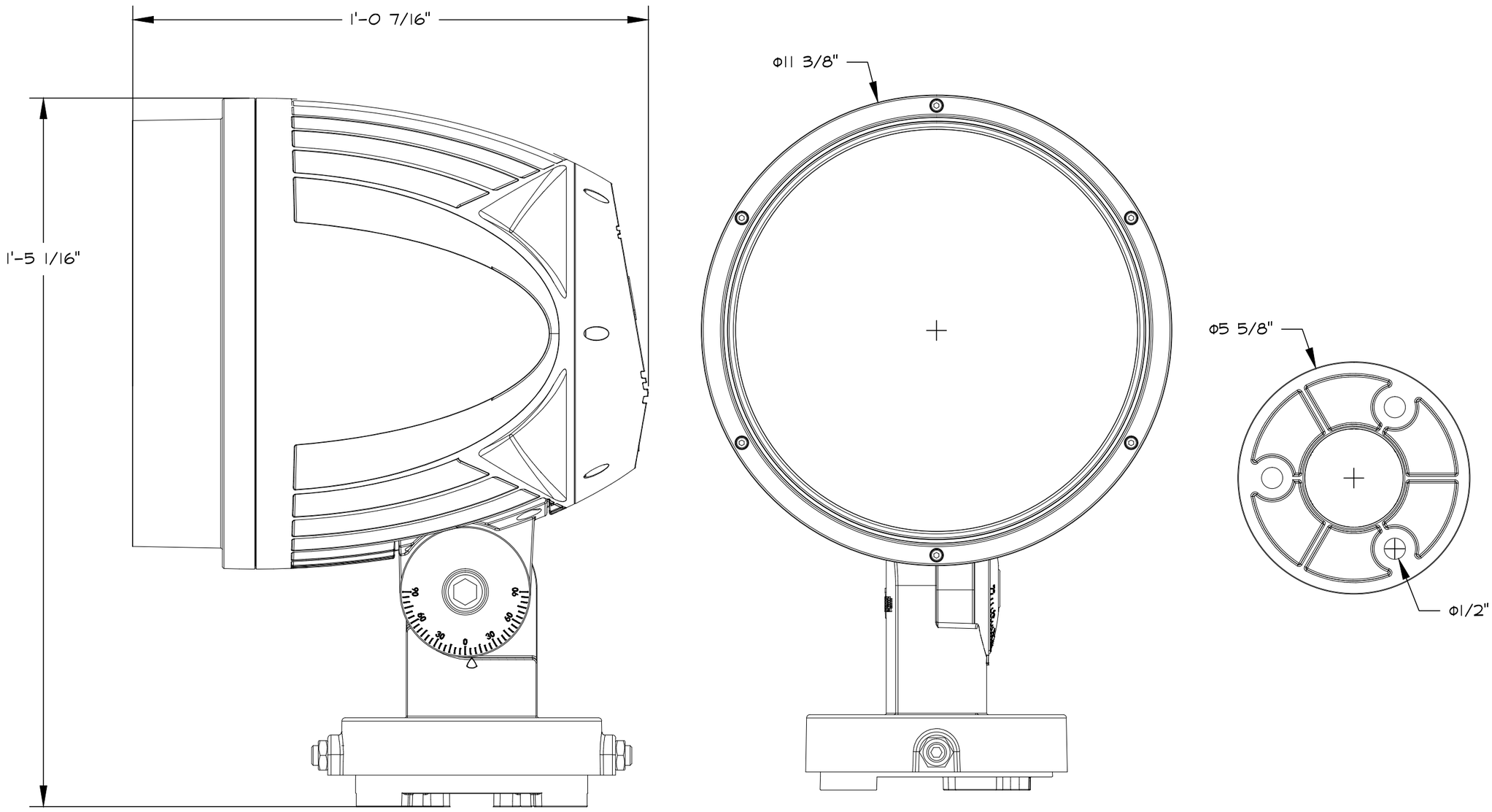

1 TX804 120w/180w ProPoint
SCALE: N.T.S.

200 Ballardvale Street
Wilmington, MA 01887
+1 (978) 570-3000 [T]
www.traxontechnologies.com

traxon:tcue
AN OSRAM BUSINESS

Traxon:cue is a solutions company. We are happy to provide whatever information and documentation is needed to clarify the system design and deepen understanding of our products, please advise us. Nevertheless, we cannot accept responsibility for any errors or omissions in our documentation. Traxon:cue and its employees cannot be held responsible for decisions made by the architect, lighting designer, or installer based on our product information. Our product information is intended to be a guide for professionals who are trained to make lighting decisions. As part of this service, a representative of Traxon:cue will ensure that our system is connected and configured correctly, and that all Traxon:cue components are functioning together properly. Drawings, layouts, and other documents we provide are based on information provided by others and are subject to their approval. They are merely suggestions. They must be reviewed by qualified professionals and incorporated into the construction documents of each relevant discipline.
Traxon:cue is not responsible for content (e.g. videos or lighting cues) unless it is specifically agreed upon and listed separately from standard system commissioning services in the project responsibility of the installing contractor to install all fixtures and control equipment in its intended location and to make all wire terminations. The installing contractor is also responsible for ensuring that structural substrate is strong and rigid enough to support the fixtures, or by Traxon:cue. Traxon:cue does not provide pre-rigging or pre-mounting of fixtures as part of its standard installation.
Traxon:cue is happy to support your team in every way we can, and we look forward to a beautiful and successful installation.
Thank you.
© 2020 Traxon Technologies

REV.	DATE	BY	REMARKS

PROJECT: ####
LOCATION: ####
DATE: ####
JOB NO: ####
FILE NAME: Pro Point.dwg
SHEET SIZE: ####
SCALE: ####
DRAWN BY: ####
CHECKED BY: ####
SHEET NUMBER: TX804
SHEET TITLE: Dimensions
####